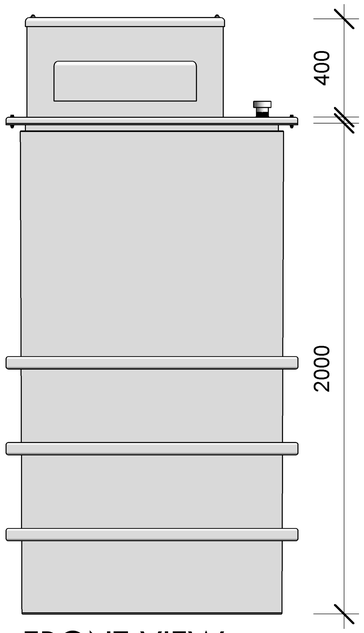

FRONT VIEW

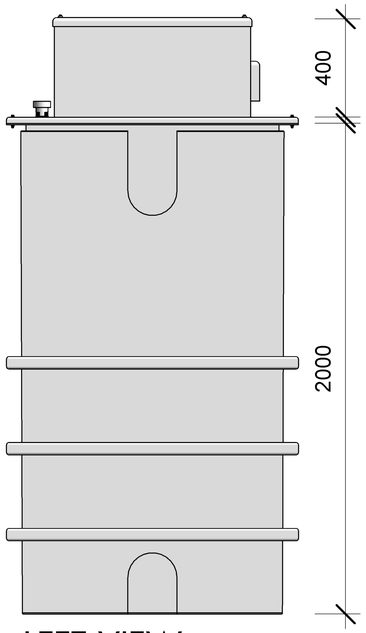

LEFT VIEW

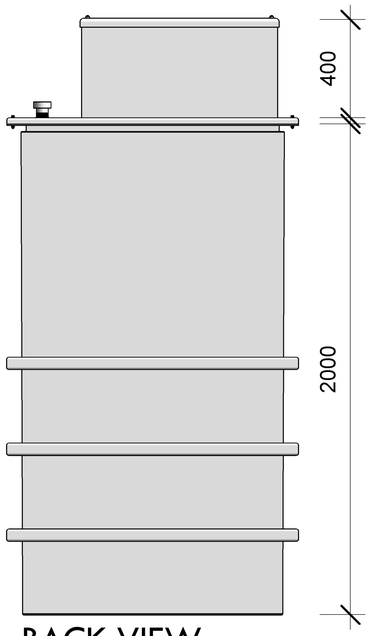

BACK VIEW

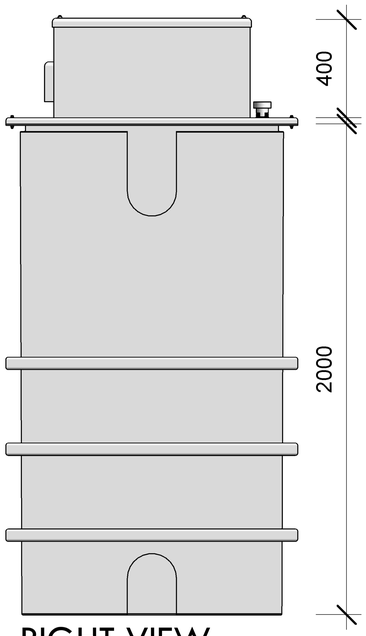

RIGHT VIEW

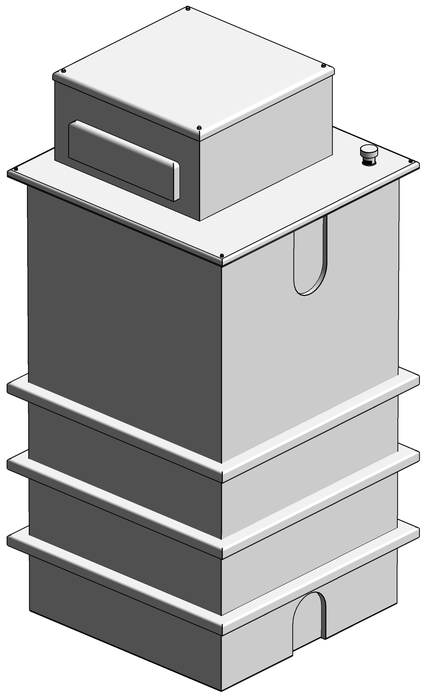

3D-VIEW

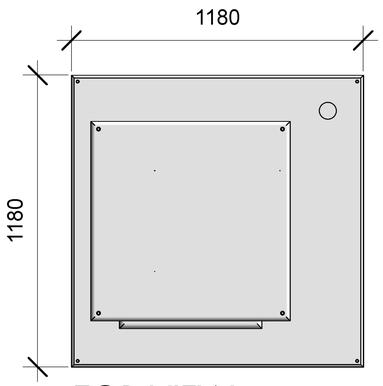

TOP VIEW

-ALL GRP TANKS MUST BE FULLY SUPPORTED ON A FLAT & LEVEL SURFACE PROVIDING STRUCTURAL SUPPORT WHEN THE TANK IS AT ITS MAXIMUM WORKING CAPACITY.

-UNLESS OTHERWISE ORGANISED ALL ONE/TWO PIECE TANKS COME WITH THEIR FITTINGS LOOSE TO BE FITTED BY OTHERS.

-STANDARD TANKS ARE SUPPLIED WITH 25MM INTEGRAL INSULATION.

-ALL DIMS ARE IN MM TO A TOLERANCE OF +/- 5MM.

-IT IS CUSTOMERS RESPONSIBILITY TO REMOVE ANY EQUIPMENT FROM DELIVERY VEHICLE. (UNLESS PRIOR ARRANGEMENTS)

-UNDER NO CIRCUMSTANCES SHOULD THE TANK BE USED TO SUPPORT PIPEWORK OR ANY OTHER ANCILLARY COMPONENTS.

-END USER SHOULD REFER TO ISSUED INSTRUCTIONS FOR.

REV	REASON	DATE

TANK

ONE PIECE

TANK TYPE

400MM RBVC

TANK REF

DP-2001L /1 - Ins - AG Airgap

TANK DIMENSIONS

Int: 1000 x 1000 x 2000mm H

Ext: 1180 x 1180 x 2030mm H

Nom Capacity: 2000L / Dry Weight: 150kg

Decca Tanks

DWG NO	DATE
SIGN	PRINT