FRONT VIEW

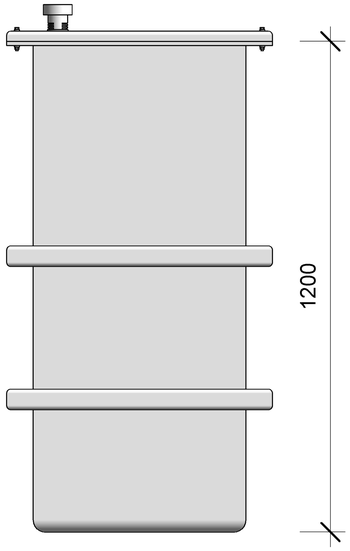

LEFT VIEW

BACK VIEW

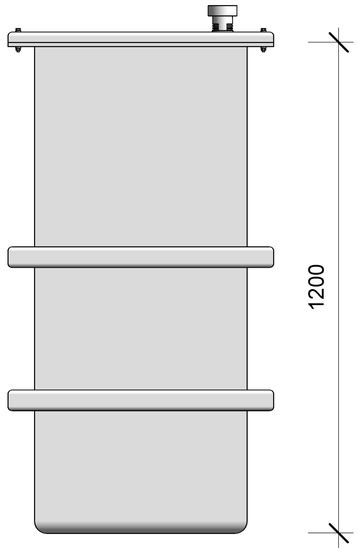

RIGHT VIEW

TOP VIEW

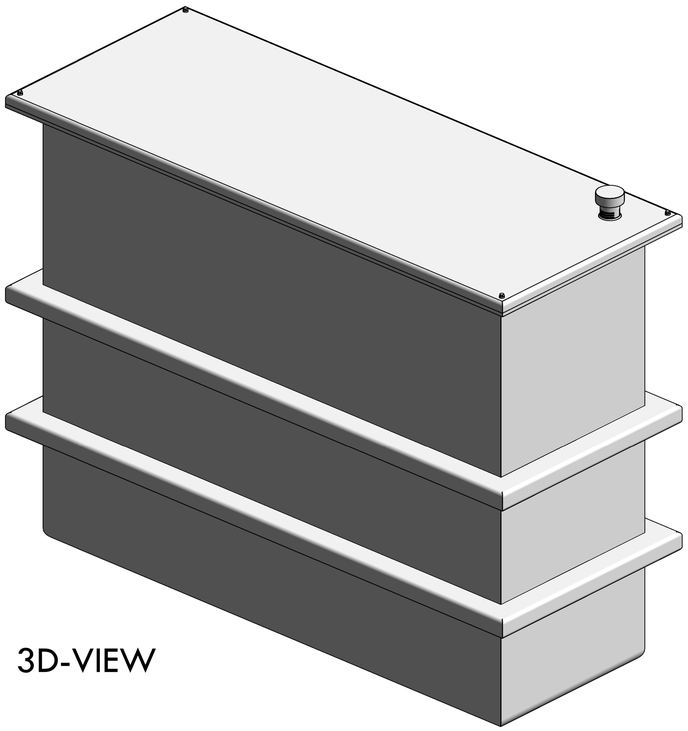

3D-VIEW

-ALL GRP TANKS MUST BE FULLY SUPPORTED ON A FLAT & LEVEL SURFACE PROVIDING STRUCTURAL SUPPORT WHEN THE TANK IS AT ITS MAXIMUM WORKING CAPACITY.

-UNLESS OTHERWISE ORGANISED ALL ONE/TWO PIECE TANKS COME WITH THEIR FITTINGS LOOSE TO BE FITTED BY OTHERS.

-STANDARD TANKS ARE SUPPLIED WITH 25MM INTEGRAL INSULATION.

-ALL DIMS ARE IN MM TO A TOLERANCE OF +/- 5MM.

-IT IS CUSTOMERS RESPONSIBILITY TO REMOVE ANY EQUIPMENT FROM DELIVERY VEHICLE. (UNLESS PRIOR ARRANGEMENTS)

-UNDER NO CIRCUMSTANCES SHOULD THE TANK BE USED TO SUPPORT PIPEWORK OR ANY OTHER ANCILLARY COMPONENTS.

-END USER SHOULD REFER TO ISSUED INSTRUCTIONS FOR.

REV	REASON	DATE

TANK

ONE PIECE-UNINSULATED

TANK TYPE

FLAT LID

TANK REF

DP-900L /1-Un-Ins - AG Airgap

TANK DIMENSIONS

Int: 1480 x 480 x 1200mm H

Ext: 1680 x 680 x 1230mm H

Nom Capacity: 900L / Dry Weight: 50kg

Decca Tanks

DWG NO	DATE
SIGN	PRINT